Business Area

- Crushing Plant
- Sand Plant
- Recycling Plant

삼영플랜트주식회사
SAMYOUNG PLANT CO., LTD.

Seoul Office

303, Seorae Building, 9, Seorae-ro 10-gil, Seocho-gu, Seoul
TEL +82-2-592-6048 **FAX** +82-2-594-1680
sy4840@hanmail.net, syplant2@yahoo.com

Headquarters and Factory

158 Simisil-gil, Daedeok-myeon, Anseong-si, Gyeonggi-do
TEL +82-31-677-6048 **FAX** +82-31-675-1680

• The model and performance of the machines described in this brochure are subject to slight changes due to our technology development and performance improvement.
• Any unauthorized reproduction of the illustrations or forms in this brochure is prohibited.

www.syplant.co.kr

BEST PRODUCT
BEST COMPANY

삼영플랜트주식회사
SAMYOUNG PLANT CO., LTD.

Greetings

Samyoung Plant is built on the history of crusher manufacturing in Korea.

Samyoung Plant aims for optimal equipment as well as the best productivity for construction aggregate, crushed sand, recycling aggregate, and grade 1 aggregate production. Samyoung Plant acquired the entire crusher manufacturing and production sector from Hyundai Steel, the company which acquired Korea's first crusher manufacturer, Kangwon Industries. We are a leader in the domestic crusher manufacturing market. Since the establishment of our company in 1994, we became the best leading crusher manufacturer in Korea by not only improving the performance of existing crushers and developing new machines, but also by developing electronic system and mobile crushers through our continuous efforts and endless investments. Especially, we are striving to develop an eco-friendly and hybrid equipment in accordance to the global market trends. The higher standards of the customers and stricter environmental regulations in keeping with the trend of the time can all be resolved at Samyoung Plant. We will offer the most satisfactory customer service based on our ongoing customer management, visit service and decades of know-how. We at Samyoung Plant will gather our wills to one, strengths from each other to the world, and everyone's dream to move toward the future.
Thank you.

SAMYOUNG

Crushing & Sand Plant

SAMYOUNG

Crushing Plant

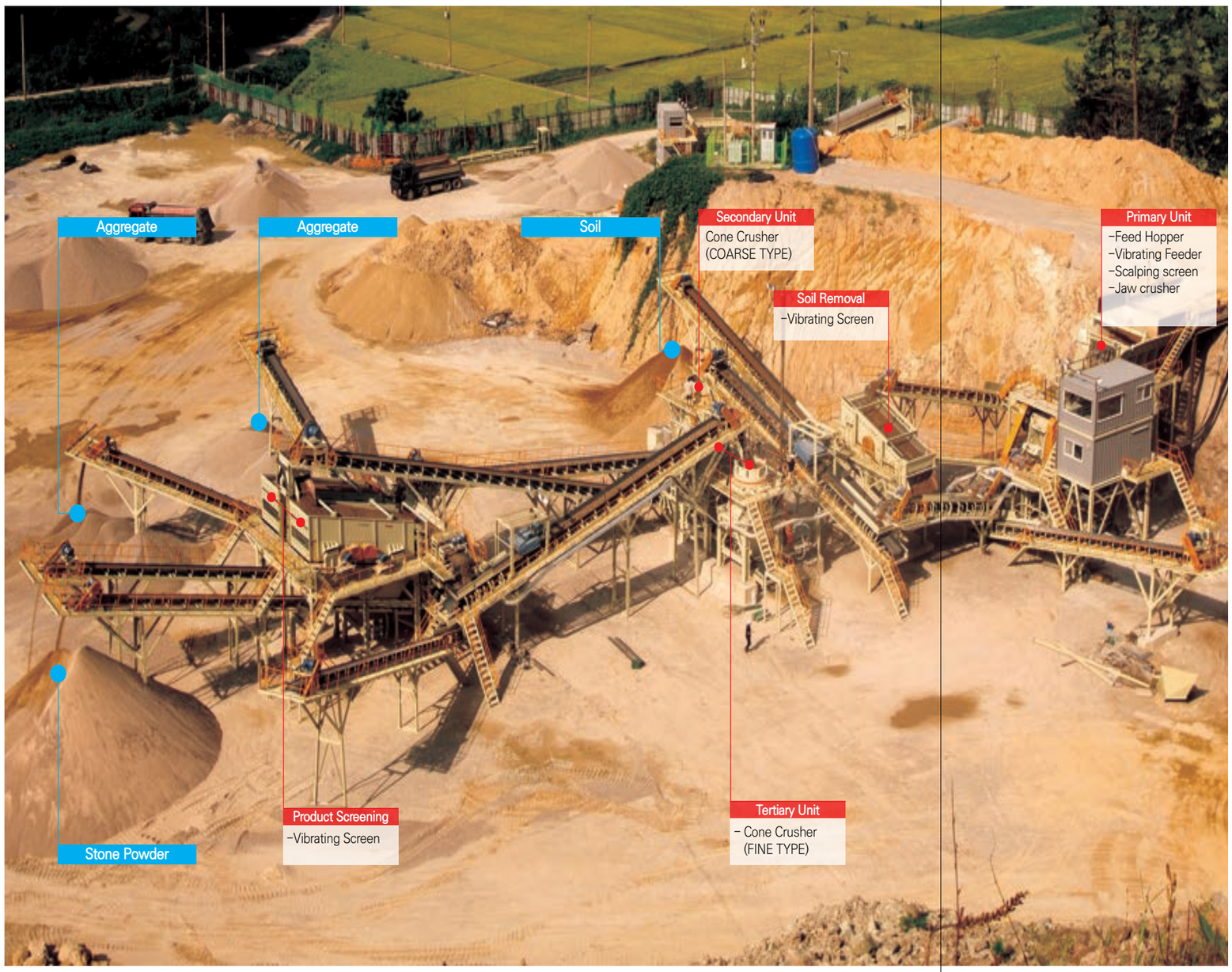

STANDARD SYSTEM TABLE							
Category		100T/H	150T/H	250T/H	350T/H	400T/H	600T/H CP
Primary Unit	Hopper	10M³	15M³	25M³	30M³	30M³	60M³
	Feeder	QH-7530	QH-9036	QH-1042	QH-1248	QH-1248	QH-1854, QA-1863
	Scalping Screen				OP-1630	OP-1630	OP-1930
	Jaw Crusher	FSK-3020	FSK-3624	FSK-4430	FSK-5040	FSK-5040	FSK-6048
Secondary Unit	Cone Crusher	MC-100(A)	MC-150(A)	MC-200(A)	MC-300(A)	MC-300(A)	CC-2100
Tertiary Unit	Cone Crusher	MC-100(B)	MC-150(B)	MC-200(B)	MC-200(B) X 2SETS	MC-300(B) X 2SETS	MC-300(B) X 2SETS
Aggregate Screening	Vibrating Screen	OP3-1842	OP3-2160	OP3-2470	OP3-2470 X 2SETS	OP3-2780 X 2SETS	OP3-3090 X 2SETS
Soil Removal	Vibrating Screen	OP2-1536	OP2-1536	OP2-1842	OP2-2160	OP2-2160	OP2-2460

Sand Plant

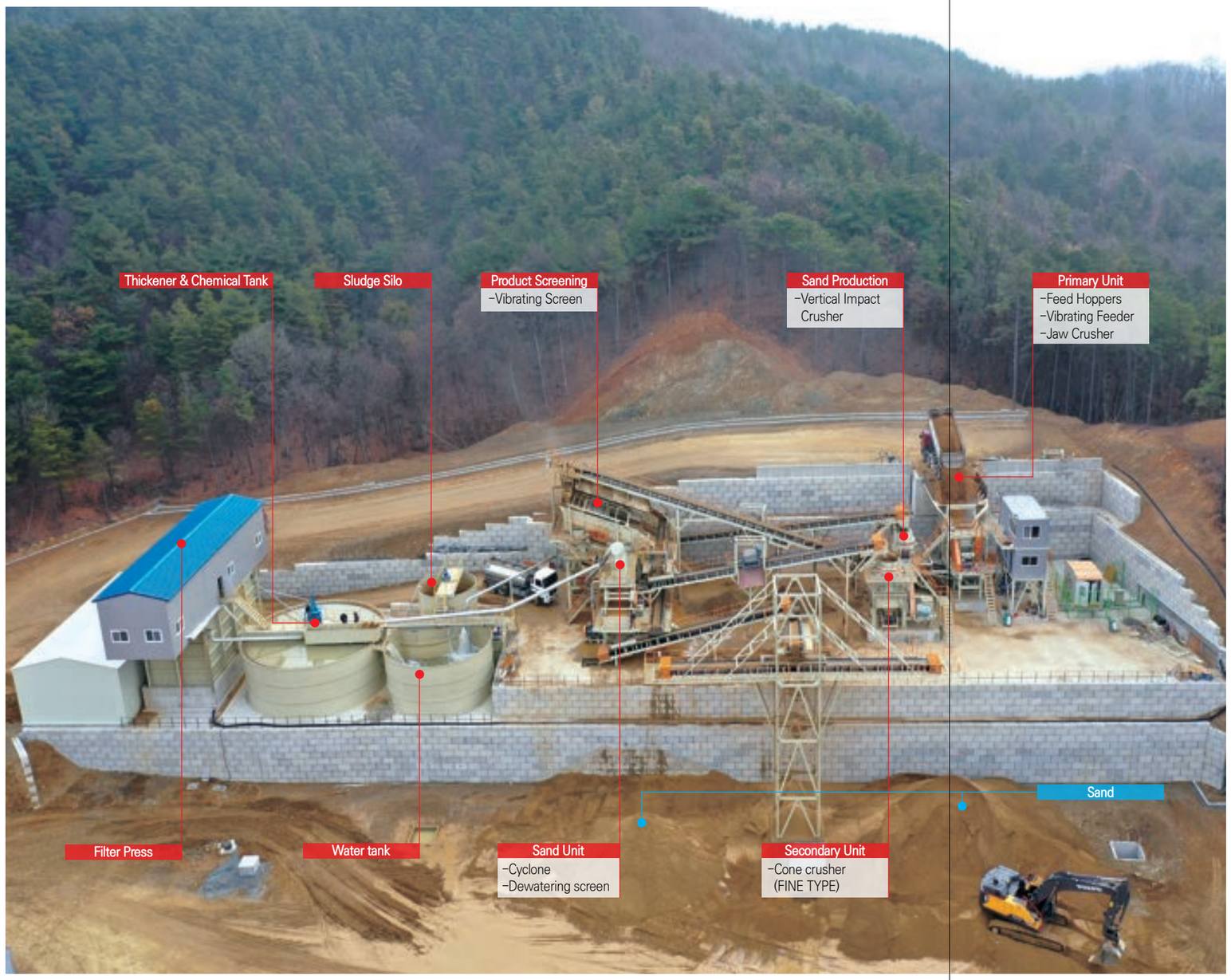

STANDARD SYSTEM TABLE				
Category		150T/H	250T/H	350T/H
Primary Unit	Hopper	20M³	25M³	30M³
	Feeder	QH-9036	QH-1042	QH-1248
	Jaw Crusher	FSK-3624	FSK-4430	FSK-5040
Secondary Unit	Cone Crusher	MC-200(A,B)	MC-200(A, B)	MC-200(A,B) x 2SET
Sand Production	Vertical Impact Crusher	SY-9000V (190KWx2EA)	SY-9000V (220KWx2EA)	SY-9000V x 2SET (220KW x 2EA)
Screening & Washing	Vibrating Screen	OP-2470	OP-2780	OP-2470 x 2SETS
	Sand Unit	SYSU-600X200	SYSU-800X300	SYSU-1000x500
Water Treatment Equipment	Thickener	Ø12MX3.6MH	Ø13.5MX4.5MH	Ø15MX4.5MH
	Water tank	Ø10MX3.6MH	Ø10MX4.5MH	Ø12MX4.5MH
	Sludge Silo	100M³	100M³	120M³
	Filter Press	SYF-20100	SYF-24100	SYF-24120

First-Class Aggregate Production Plant

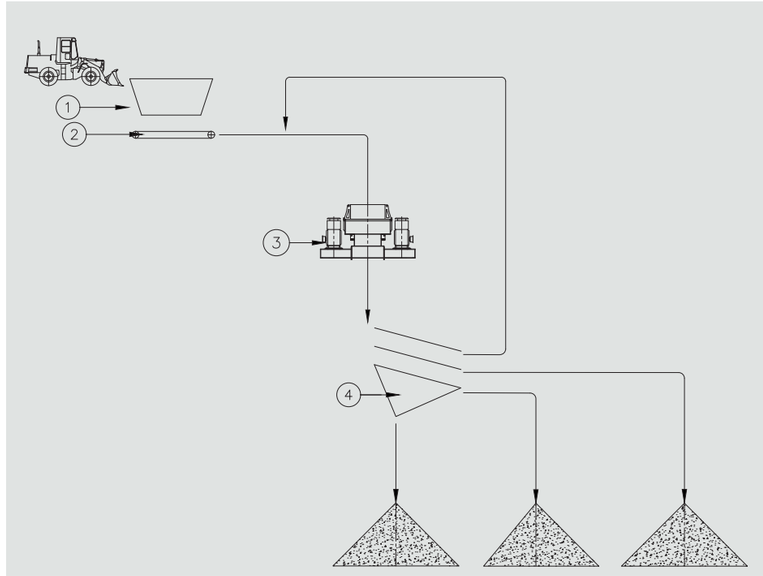

STANDARD SYSTEM TABLE				
Category		100T/H	150T/H	200T/H
Feeding Material	Feed hopper	$10M^3$	$15M^3$	$20M^3$
	Belt Feeder	750W	900W	1050W
Shaping Unit	Vertical Impact Crusher	SY-9000V 220KW	SY-9000V 220KW x 2EA	SY-9000V 220KW x 2EA
Product Screening	Vibrating Screen	OP3-2160	OP3-2460	OP3-2470

SAMYOUNG

Recycling Plant

Mobile Jaw Crusher SJ-300

Specifications

Model	Feed Opening	Feeder	Jaw Crusher	Main Conveyor	Engine	Production Capacity	Dimensions	Gross Weight
SJ-300	1100 x 750	QH-1042	FSKM-4430	1200W x 12.5ML	DC09 315HP	최대360T/H	15.8mL x 2.99mW x 3.49mH	50 TON

1

Jaw Crusher

- Samyoung Plant's mobile jaw crusher FSKM-300
- Improved crushing efficiency with main shaft rotation speed over 250rpm
- Automatic overload relief function applied
- Hydraulic clearance (OSS) adjustment and maintenance device
- Forward and reverse rotation function

2

Feeder

- Load-sensitive feeding speed control
- Customized feeding speed setting
- Foldable hopper

3

Engine Room

4

Main Conveyor

5

Track frame

- Powerful 50,000 N-m driving force
- Lower rolling resistance thanks to upper rollers
- Removable track frame

6

Hydraulic box

- Centralization of hydraulic components for excellent maintenance

7

Magnetic Separator

8

Wireless remote controller

- Work, driving, and maintenance are all possible
- Real-time work information output
- Low and high speed driving functions

9

Monitor

- Graphical representation of functions for each mode
- Real-time output of key functions
- Easy input/output and storage

10

Control panel

- Button and switch arrangement for user convenience

SAMYOUNG

Mobile Cone Crusher SC-300

Specifications

Model	Feed Opening	Feeder	Prescreen	Cone Crusher	Main Conveyor	Engine	Oil Tank	Production Capacity	Dimension	Gross Weight
SC-300	2100mm	1050 x 4.8ML	OP1016	SCM-300	1050W x 12ML	DC13 385HP	350L	최대360T/H	16.99mL x 2.99mW x 3.46mH	45 TON

Cone Crusher

- Samyoung Plant's mobile cone crusher SCM-300
- Improved crushing efficiency with count shaft rotation speed over 700rpm
- Automatic overload relief function applied
- Hydraulic clearance (CSS) adjustment and maintenance device
- Mantle diameter Φ1200

Pre-Screen

Feeder

Engine Room

Main Conveyor

Oil Unit

- Small capacity tank of 350liter
- Large space for excellent maintenance
- Heating and cooling functions

Track Frame

- Strong driving performance of 50,000 N-m
- Lower rolling resistance with upper rollers
- Removable track frame

Hydraulic box

- Centralized hydraulic components for easy maintenance

Wireless Remote Control

- Work, drive, and service all at the same time
- Real-time work information output
- Low speed and high speed driving functions

Monitor

- Graphicalization of functions for each mode
- Real-time output of major functions
- Easy input/output and storage

Control Panel

- Button and switch arrangement for user convenience

Portable Crushing Plant

Portable Jaw Crusher

Model	Hopper	Feeder	Jaw Crusher
SYPJ-2514	6M³	QH-7530	FSK-2514
SYPJ-3020	10M³	QH-7530	FSK-3020
SYPJ-3624	15M³	QH-9036	FSK-3624
SYPJ-4430	20M³	QH-1042	FSK-4430

Portable Cone Crusher

Model	Cone Crusher	Vibrating Screen
SYPC-100	MC-100	OP-1536
SYPC-150	MC-150	OP-1842
SYPC-200	MC-200	OP-2160

Portable Impact Crusher

Impact Crusher	Vibrating Screen
SY-9000V (220KW x 1MOTOR)	OP-2460

Jaw Crusher

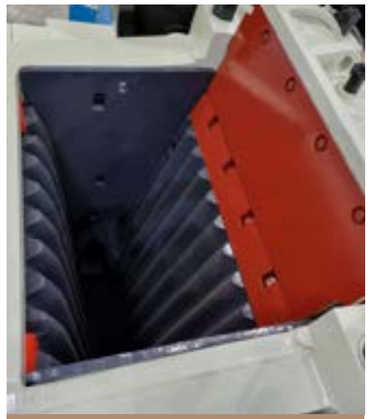

Jaw crusher inlet

Intensive lubrication

1. Improved Production

1) Increased production by about 20% compared to the old equivalent jaw crusher
2) Increase the size of input opening: 5%
3) Increased the number of revolutions: 10%
4) Increased motor power : 20%

2. Improved Convenience and Durability

1) Hydraulic automatic setting device
2) Improved mainframe structure and strength

Hydraulic Setting Device

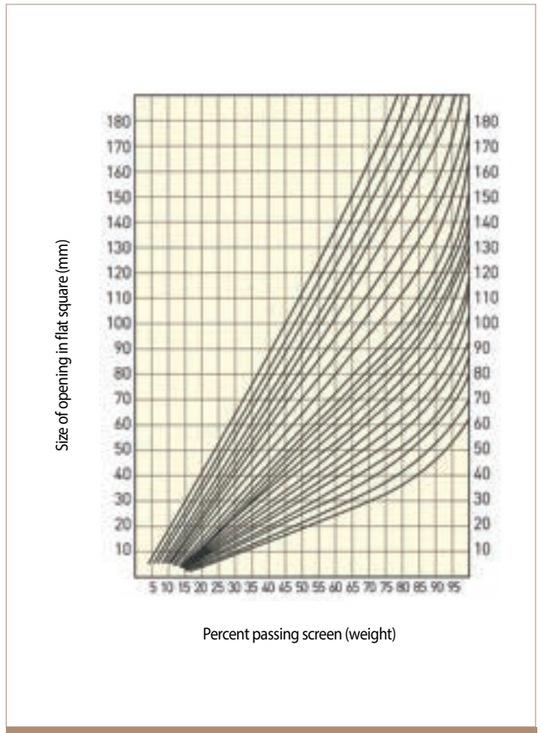

Product particle size distribution

Jaw Crusher Specification

Model	Input Size (mm)	Output (t/h)											RPM	Motor (kw)	Weight (ton)
		Setting Clearance (mm)													
		50	60	80	100	125	150	175	200	225	250	300			
FSK-2514	640 x 345	42	53	76									250	37	4.1
FSK-3020	750 × 500	42	53	72	94	117	138						250	45	7.7
FSK-3624	900 × 600			108	132	164	186	196					250	75	12.2
FSK-4430	1,100 × 750				200	250	290	325	360				250	110	22
FSK-5040	1,250 × 1,000					313	363	413	464	482	500		220	220	41
FSK-6048	1,500 × 1,200						425	468	510	550	590	640	190	300	69.7

MC Cone Crusher

Hydraulic automatic setting device

Integrated oil unit

1. Improved Production

1) Approx. 20% improvement compared to old equivalent CONE CRUSHER (CC, CSH)
2) Increased inlet size : 20%
3) Increase the number of revolutions : 10%
4) Increased motor power : 15%

2. Improved Convenience

1) Hydraulic automatic setting device
2) Foreign material discharge through release cylinder
3) Lock post cylinder: Top-shelf fixation

3. Improved Maintainability and Durability

1) Reduced replacement time by changing the liner fastening method: 6 hours (old) → 2 hours (new)
2) Changeable between primary (COARSE) and secondary (FINE) types by simply changing the liner
3) Use of spiral gear: reduced noise and vibration, excellent power transmission efficiency

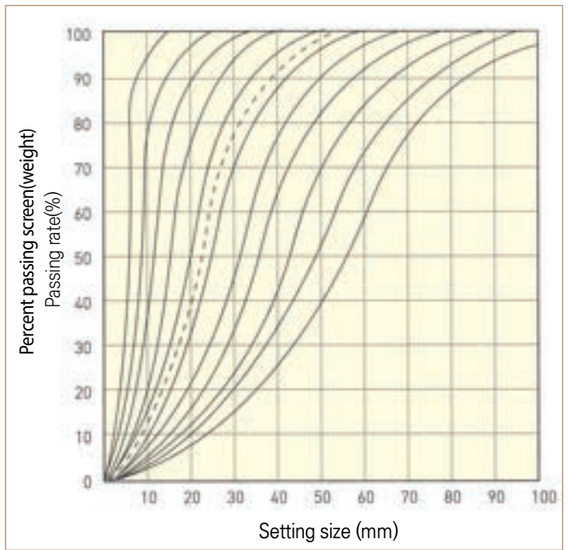

Product Particle Size Distribution

MC Cone Crusher Specification

Model	Input Size(mm)		Output (t/h)											RPM	Motor (kw)	Weight (ton)
	Closed (mm)	Open (mm)	Setting Clearance (mm)													
			4	6	10	13	16	20	25	30	40	50	60			
MC-100(A)/ CC-900	125	140				45	50	70	80	90	105			630	37~55	12
MC-100(B)/ CSH-900	50	70		27	48	57	65	80								
MC-150(A)/ CC-1200	170	190				72	90	110	135	155	185	200		530	75~110	24
MC-150(B)/ CSH-1200	70	100			70	90	110	135								
MC-200(A)	210	235					125	150	185	210	250	265		580	160	23
MC-200(B)	90	120			95	125	150	185								
MC-300(A)	270	305						220	290	335	390	455	480	550	220	43
MC-300(B)	135	175			145	185	220	260	290							
CC-2100	300	335							360	430	560	700	800	435	200~300	79

High Speed Cone Crusher

1. High Quality Aggregate and Crushed Sand Production

1) Production of first grade aggregate with 10% or less feldspar (SMA aggregate, etc.)
2) Increased production of crushed sand with minimum settings
3) Increase production with minimal return volume (minimize set under rate)

2. Improved Convenience and Durability

1) Hydraulic automatic setting device
2) Automatic discharge of debris through release cylinder

Convenient liner replacement (jacking bar type)

Hydraulic cylinder for top cell fixation

Hydraulic automatic setting device

Oil unit with maximized cooling efficiency

Automatic discharge of foreign matter (release cylinder)

Quality assurance

HS Cone Crusher Specification

Model & Type	Maximum Feeding Size (mm)	Output (t/h)								RPM	Motor (kw)	Weight (ton)
		Setting Clearance (mm)										
		8	10	13	16	19	25	32	38			
HS-300 (C) HS-300 (M)	185	90~110	115~140	150~185	180~220	200~240	230~280	250~320	300~380	750~1050	190~220	18
HS-400 (C) HS-400 (M)	239		140~175	185~230	225~280	255~320	295~370	320~430	350~440	800~900	260~300	30
HS-500 (C) HS-500 (M)	283		175~220	230~290	280~350	320~400	365~455	405~535	445~605	700~900	300~375	37

Vertical Shaft Impact Crusher

1. Increased production of first grade aggregate and crushed sand

1) Crushing through rotor rotation
2) Improved granularity by rock to rock method
3) High quality primary aggregate and SMA aggregate production
4) Increased production of crushed sand

2. Increased Convenience and Durability

1) Easy to check and replace internal consumables
2) Maintain optimal crushing conditions with CASE CADE & OVER FLOW TYPE
3) Low noise, low vibration crushing with solid structure

Vertical Shaft Impact Crusher Specification

Contents \ Model	SY-9000V	
	Dead Stock	
Rotor (mm)	900	
Rotor Speed (m/sec)	45 ~ 65	
Rotation Speed (rpm)	1000 ~ 1800	
Drive Type	V-BELT	
Max. input size (mm)	25×55×70	
Purpose	Shaping	Sand Making

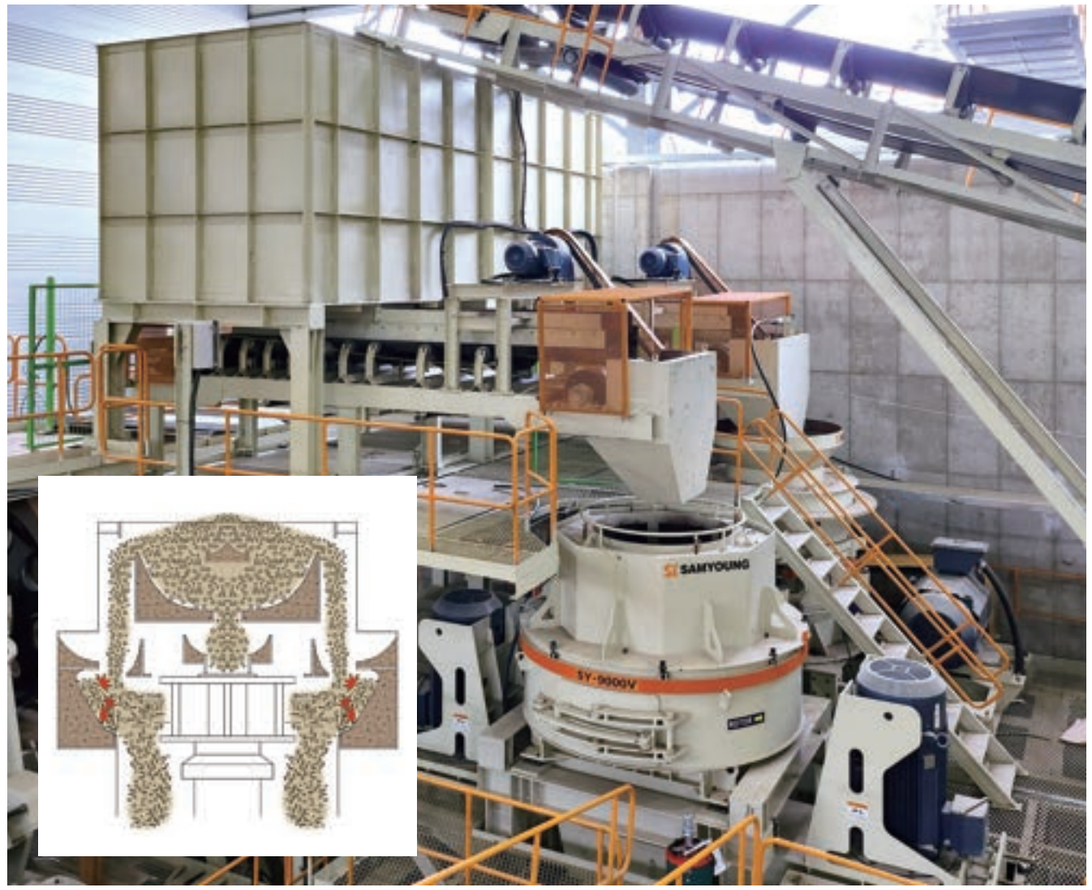

Production Capacity

Production	Capacity (t/h)	
	SY-9000V	
Operation Type	Dual	
Motor (kw)	190×2	220×2
Sand production	265~630	310~730
Shaping	265~630	310~730

1. The above capability is applied in case the aggregates, as a specific gravity of 1.6, are supplied consistently.

Horizontal Shaft Impact Crusher

1. High Quality Aggregate Production

1) Strong crushing effect through rotor rotation
2) High-quality aggregate production through improved particle shape
3) Suitable for crushing soft materials such as limestone and recycled materials

2. Improvement of Work Convenience

1) Frame fixation utilizing hydraulic system
2) Easy to replace rotor and machine consumables

Horizontal Shaft Impact Crusher Specification

Model	Rotor (mm)	Production (t/h)				Motor (kw)
		Rotor Speed (m/s)				
		21~24	25~29	30~34	36~45	
SYHSI-1010H	Ø1050 x 1000W	60~71	63~70	56~62	51~57	55~75
SYHSI-1310H	Ø1350 x 1000W	123~133	115~125	103~114	95~105	75~110
SYHSI-1312H	Ø1350 x 1200W	153~168	143~157	128~142	115~129	95~130
SYHSI-1315H	Ø1350 x 1500W	183~202	170~189	153~169	134~153	110~130
SYHSI-1615H	Ø1600 x 1500W	260~285	240~265	217~240	195~220	150~175
SYHSI-1620H	Ø1600 x 2000W	340~370	315~350	283~315	250~280	190~220
SYHSI-2015H	Ø2000 x 1500W	410~450	380~415	345~380	315~345	220~250
SYHSI-2020H	Ø2000 x 2000W	540~590	500~550	460~500	420~460	300~400

Vibrating Feeder

Vibrating Feeder Specification

Model	W x L(mm)	Production(t/h)	Motor(kw)	Others
QH-7530	750 x 3600	80 - 100	11kw	Horizontal
QH-9036	900 x 3600	100 - 200	15kw	Horizontal
QH-1042	1050 x 4200	200 - 300	30kw	Horizontal
QH-1248	1200 x 4800	300 - 400	37kw	Horizontal
QH-1854	1800 x 5400	500 - 600	55kw	Horizontal

Apron Feeders

Apron Feeder Specification

Model	W x L(mm)	Production(t/h)	Motor(kw)
QA-930	900 × 3,000	150	5.5
QA-960	900 × 6,000	150	5.5
QA-1236	1,200 × 3,600	250	7.5
QA-1242	1,200 × 4,200	250	7.5
QA-1554	1,500 × 5,400	400	15
QA-1863	1,800 × 6,300	600	22
QA-1870	1,800 × 7,000	600	30

Scalping Screen

Scalping Screen Specification

Model	W x L(mm)	Production(t/h)	Motor(kw)
OP-1224X	1200 X 2400	150~200	11
OP-1430X	1400 X 3000	250~300	15
OP-1624X	1600 X 2400	250~400	19
OP-1630X	1600 X 3000	350~500	22
OP-1930X	1900 X 3000	450~600	30

Vibrating Screen

Various mesh materials available (wire mesh, urethane, rubber mesh)

Aggregate Washing Equipment

Marshmallow Springs

Vibrating Screen Specification

Model	Section	W x L(mm)	Motor(kw)
OP-1236	1 ~ 4	1,200 x 3,600	11
OP-1536	1 ~ 4	1,500 x 3,600	15
OP-1842	1 ~ 4	1,800 x 4,200	22
OP-2160	1 ~ 4	2,100 x 6,000	37
OP-2460	1 ~ 3	2,400 x 6,000	45
OP-2470	1 ~ 3	2,400 x 7,000	30 x 2
OP-2780	1 ~ 3	2,700 x 8,000	37 x 2
OP-3090	1 ~ 3	3,000 x 9,000	45 x 2

Sand Unit

Sand Unit Specification

Model	Pump		Cyclone	Dewatering Screen			Water Tank (M3)
	Size	kw	Type	Type	Area	kw	ton
SYSU 300 x 100	6"	37	650	10 x 24	2.5	2.2X2	6
SYSU 500 x 160	8"	45	900	15 x 30	4.5	22	10
SYSU 600 x 200	10"	55	900	18 x 33	6	22	18
SYSU 800 x 300	12"	90	1100	21 x 45	9.5	22	25
SYSU 800 x 400	12"	90	1100	21 x 54	11.3	30	30
SYSU 1000 x 500	12"	90	1100	24 x 60	14.4	37	50

Spiral Classifier

Spiral Classifier Specification

Model	Screw Type	Screw Length	Tank Length	Rotational Speed	Production Capacity (SINGLE)	Motor
SYC-750	SINGLE /DOUBLE	6420MM	6845MM	9.2 RPM	30 TON/HR	7.5 KW
SYC-1050	SINGLE /DOUBLE	7058MM	7300MM	10 RPM	60 TON/HR	11 KW
SYC-1500	SINGLE /DOUBLE	7890MM	8100MM	9 RPM	80 TON/HR	15 KW

Wasted Water Treatment System

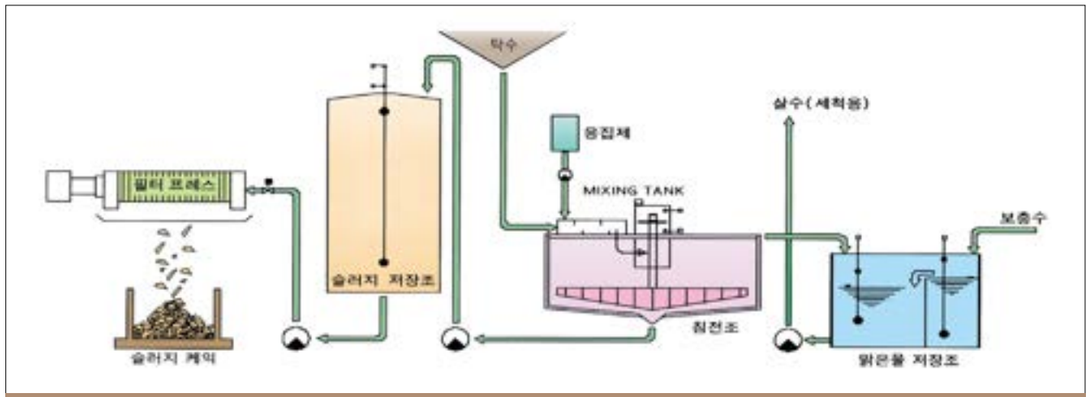

Process diagram of wastewater treatment facility

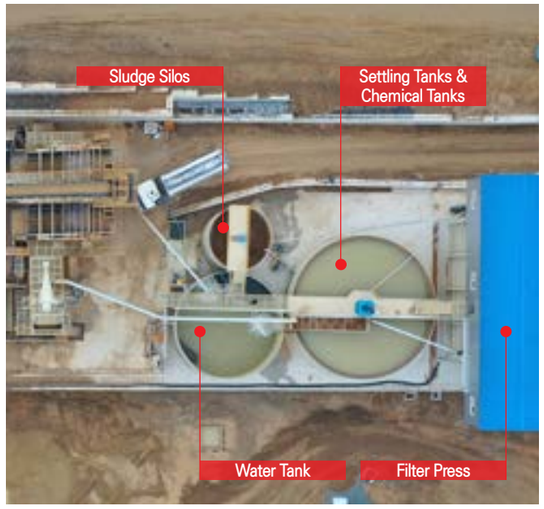

Wasted Water Treatment System Specification

Category		SYWS-100	SYWS-150	SYWS-200	SYWS-250
Water Treatment System	Thickener	Ø8Mx3.6MH	Ø10Mx3.6MH	Ø13.5Mx4.5MH	Ø15Mx4.5MH
	Water Tank	Ø8Mx3.6MH	Ø10Mx3.6MH	Ø10Mx4.5MH	Ø12Mx4.5MH
	Sludge Tank	80M³	100M³	100M³	120M³
	Chemical Tank	CT-2000	CT-2000	CT-2000	CT-2000
	Filter Presses	SYF-15080	SYF-20100	SYF-24100	SYF-24120

Filter Press

Filter Press Specification

Category		SYFP-1500			SYFP-2000			SYFP-2024			SYFP-2224		
PLATE SIZE(mm)		1500 x 1500			2000 x 2000			2000 x 2400			2200 x 2400		
NO/CHAMBER		50	80	100	50	80	100	50	80	100	80	100	120
CAKE VOLUME(L)/ WT(75%)/CYCLE		5.3	8.48	10.6	9	14.4	18	15	24	30	26.4	33	40
SLURRY(m^3)/Wt(98%)		37.1	59.3	74.2	63	100.8	126	105	168	210	184.8	231	277
FILTERAREA(m^2)		174	278	348	353	565	706	428	685	857	758	948	1137
SIZE (mm)	W	2200			2800			2800			3000		
	L	9900	12240	13800	10500	13200	15000	10500	14000	15000	14500	16500	18500
	H	1900			2400			2400			3000		

Jaw Crusher Sectional Drawing

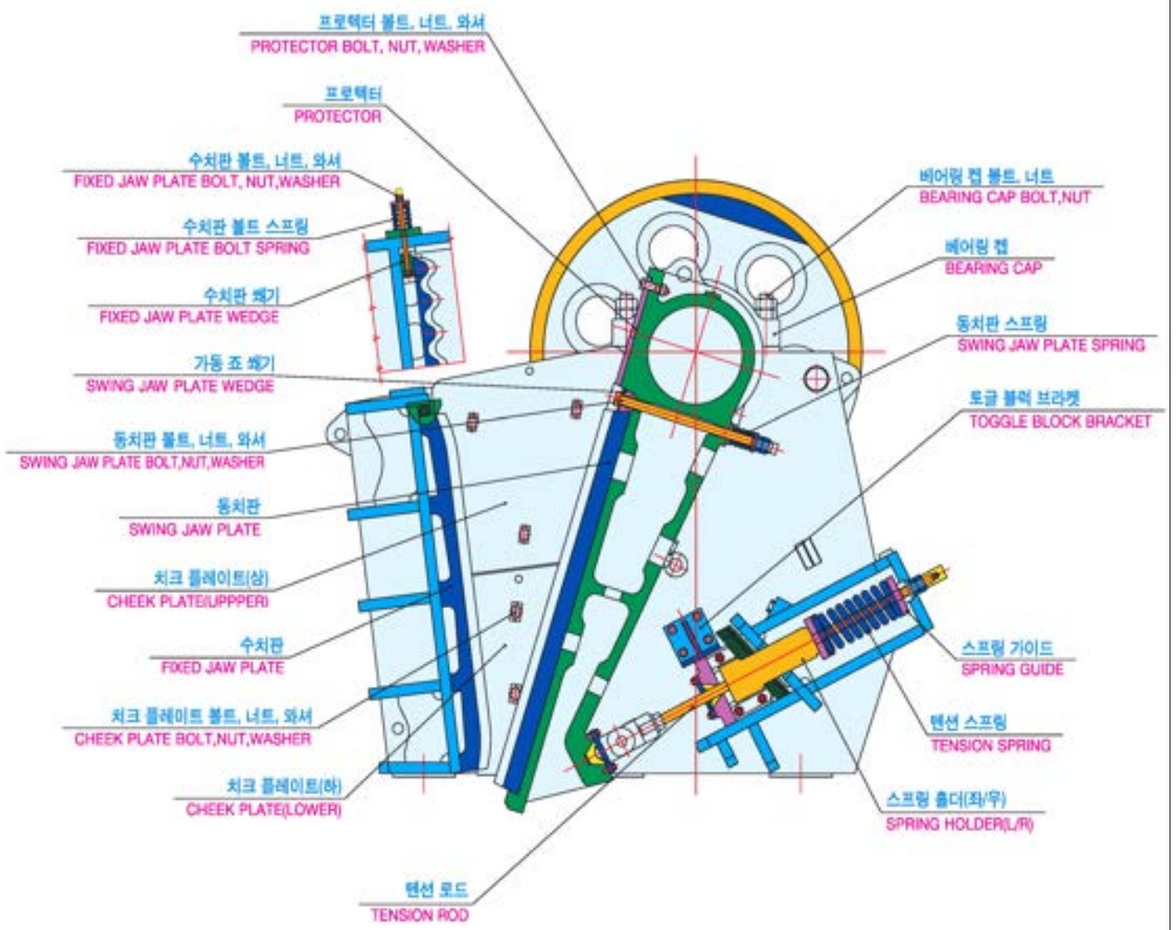

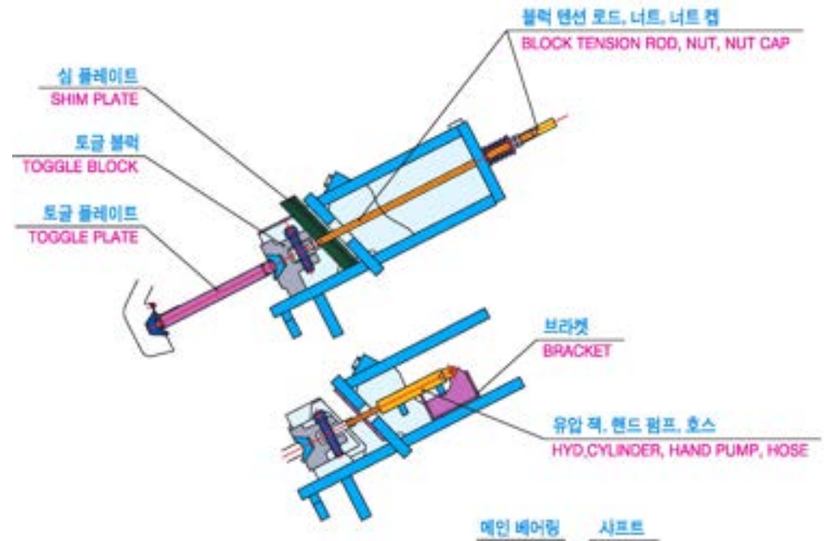

SETTING

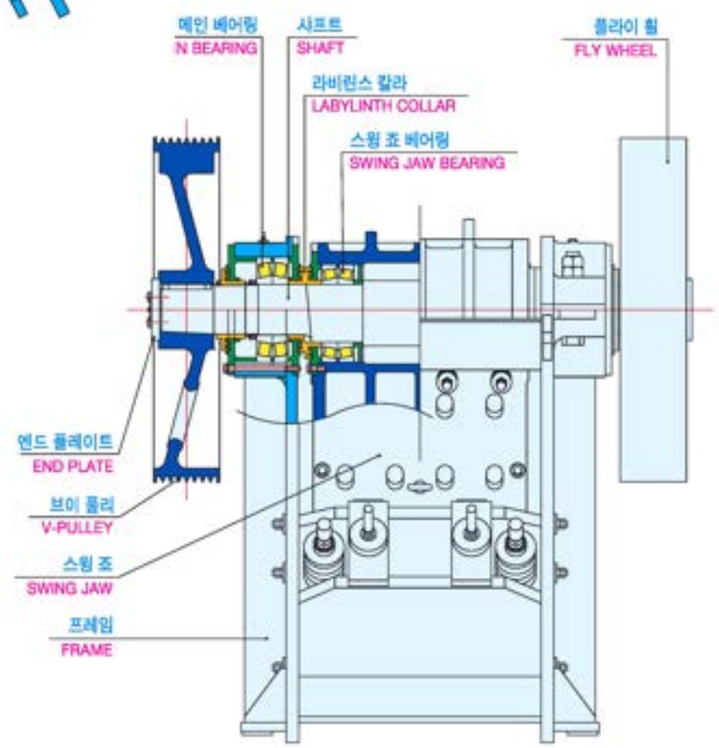
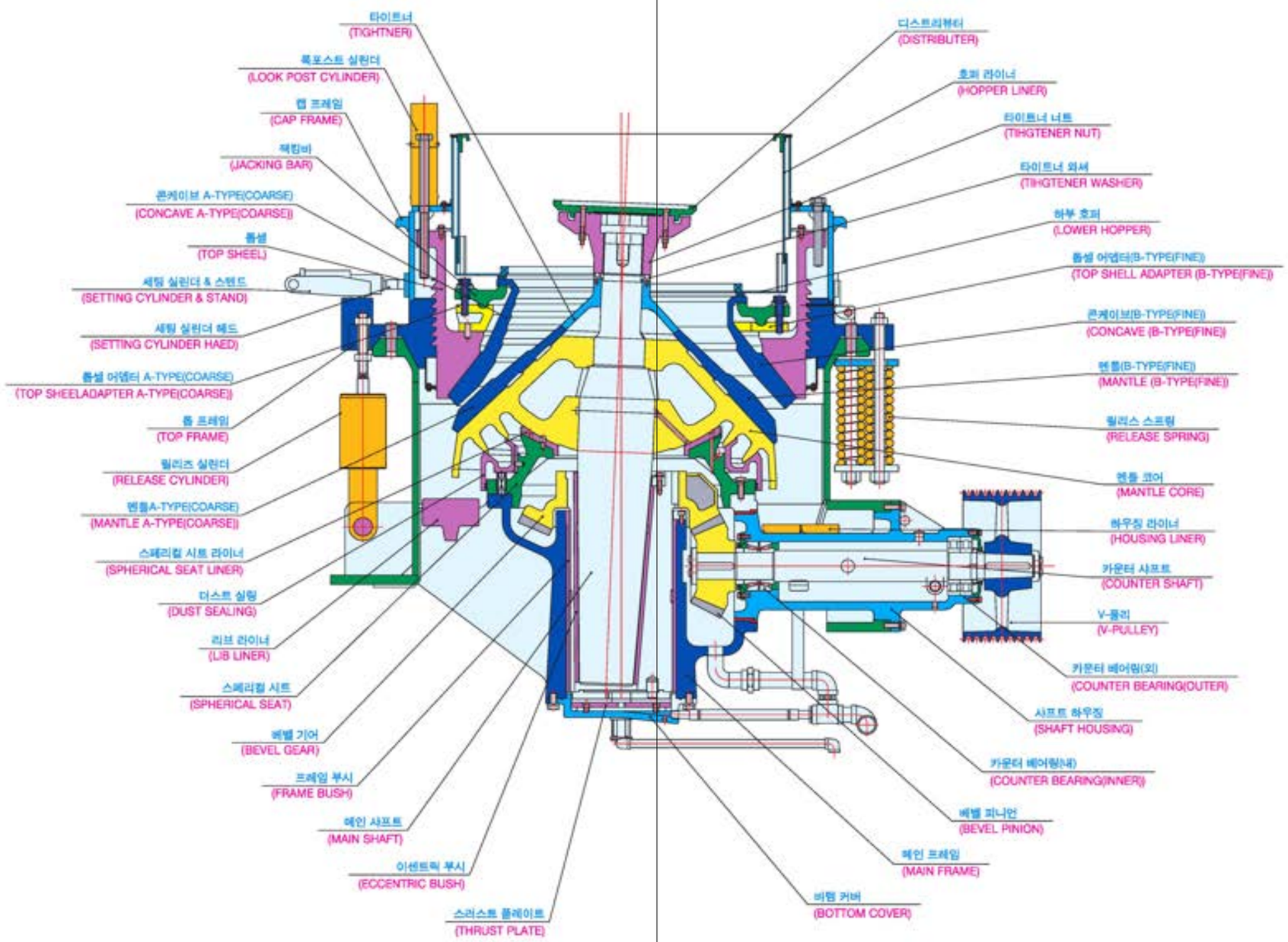
Cone Crusher Section Drawing